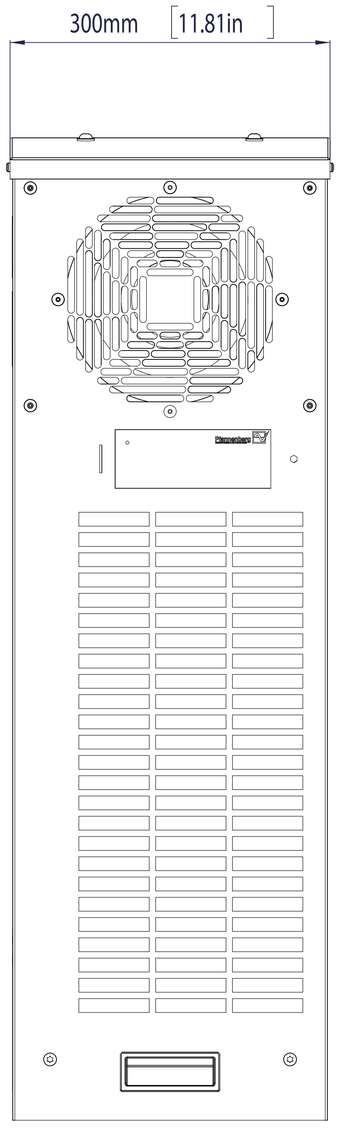

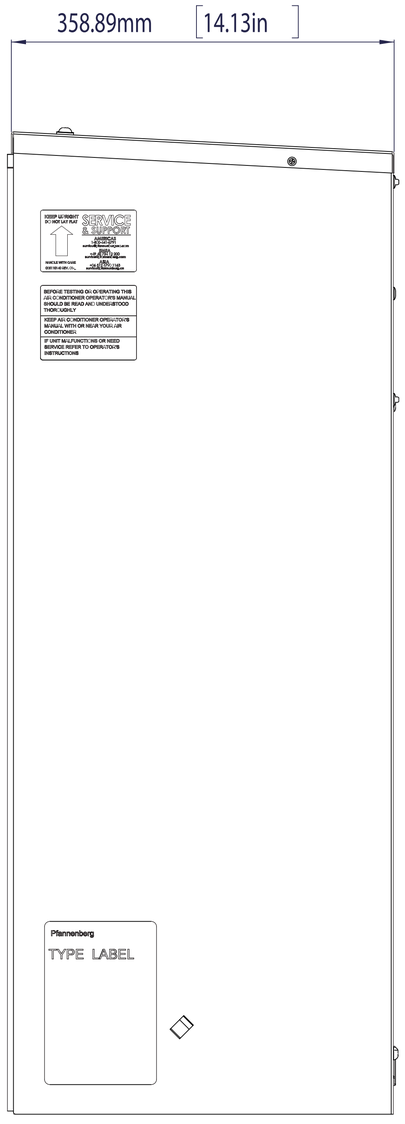

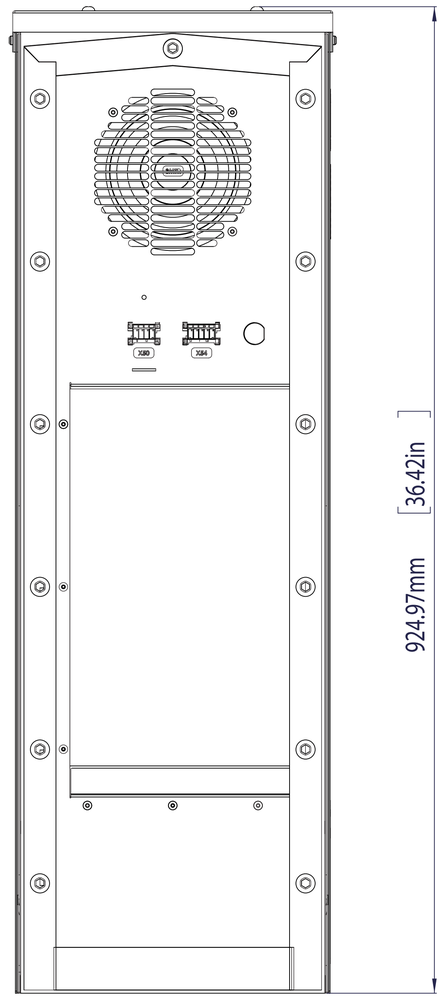

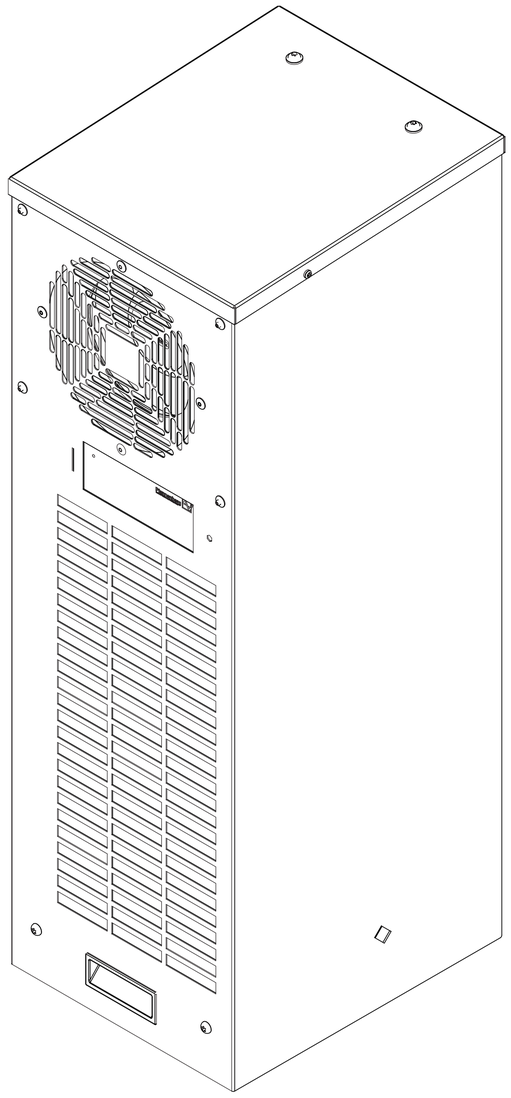

ELECTRONICAL REVISION LABEL
MECHANICAL REVISION LABEL

Bemaßung/Dimension: mm [inch]